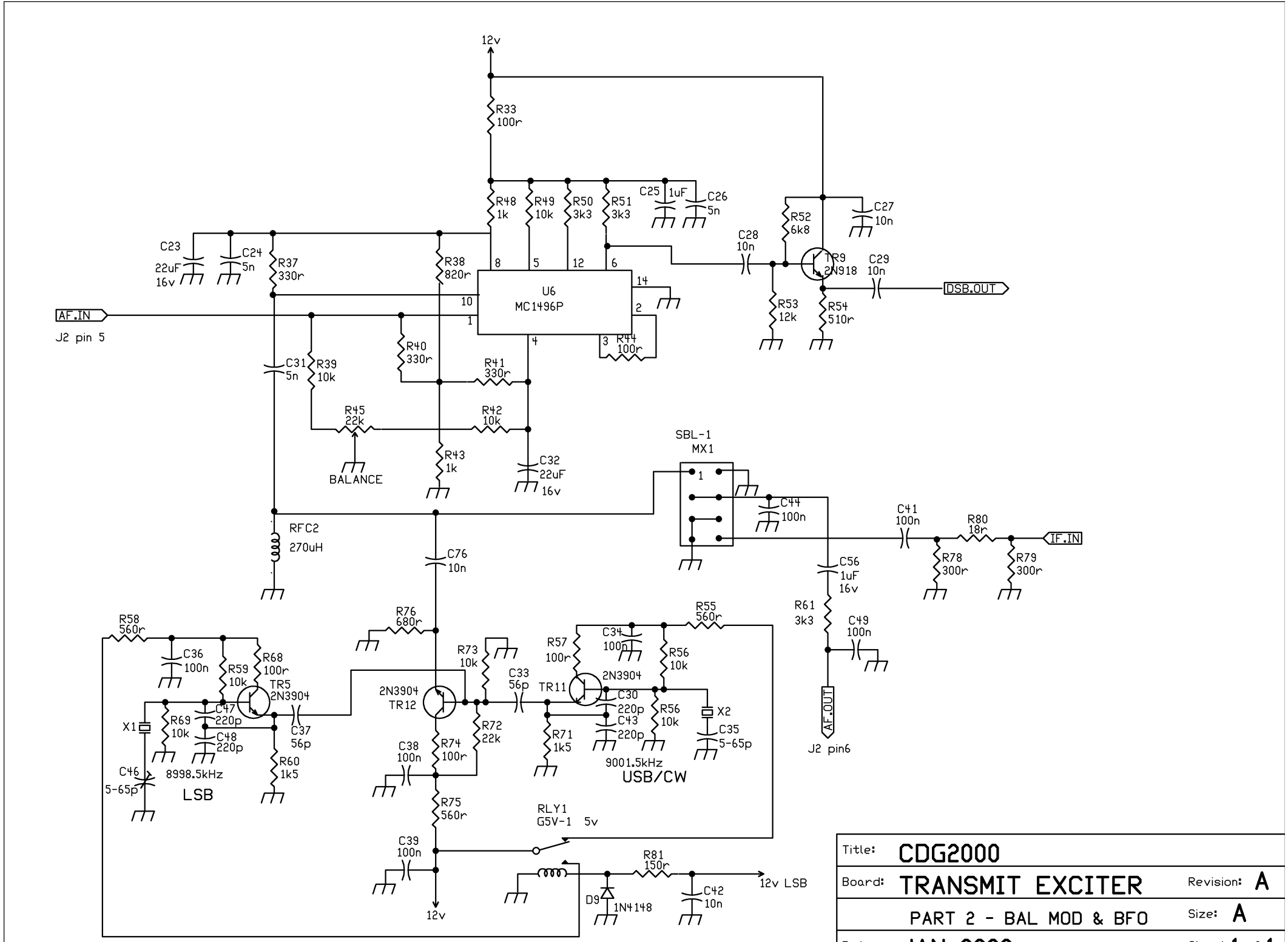

Title:	CDG2000		
Board:	TRANSMIT EXCITER	Revision:	A
	PART 2 - BAL MOD & BFO	Size:	A
Date:	JAN 2003	Sheet	1 of 1