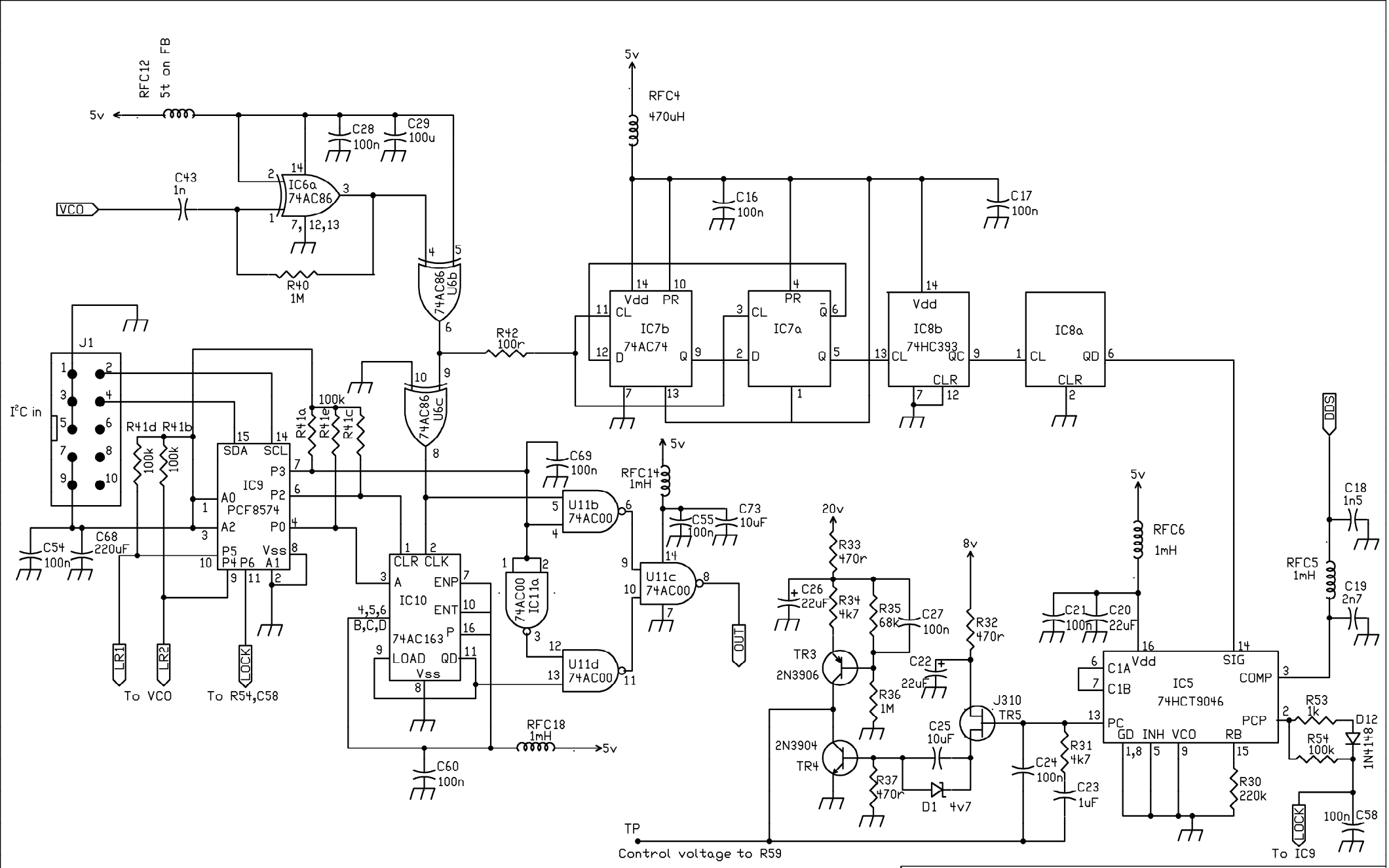

Co:	CDG2000		
Title:	Synthesiser Logic & PLL		
Board:	CDG2000-2	Revision:	B
Drawn by:	G3OGQ ,G8KBB	Size:	A
Date:	May 2005	Sheet	2 of 3